Contents

1. Part A –Gate Design and Transistor Sizing 2
1.1 Introduction 2
1.2 OHdecoder 2
1.3 MUX 3
1.4 OAI31 4
1.5 XNOR 5
1.6 AOI21 7
2. Part B –Stick Diagram Designs 9
2.1 Introduction 9
1.2 OHdecoder stick diagram 9
1.3 MUX stick diagram 10
1.4 OAI31 stick diagram 10
1.5 XNOR stick diagram 11
1.6 AOI21 stick diagram 11
3. Part C – Top View Designs using MAGIC 12
3.1 Introduction 12
3.2 OHdecoder MAGIC 12
3.3 MUX MAGIC 14
3.4 OAI31 MAGIC 15
3.5 XNOR MAGIC 17
3.6 AOI21 MAGIC 19
4. Part D – Diffusion Capacitance Analysis (AOI21) 21
4.1 Area and Perimeter Measurements 21
4.2 Diffusion Capacitance Calculations 21
Part E – Delay Analysis for AOI21 22

Ioannis Papadopoulos AEM: 03899

All the NGSpice and MAGIC files weren't included in the Report but were included in the zip.

1. Part A –Gate Design and Transistor Sizing

1.1 Introduction

Part (a) of this assignment focuses on the schematic design and transistor sizing of several CMOS logic circuits. Each circuit corresponds to one of the given Boolean functions and must be implemented using static CMOS logic (except for the multiplexer, which will be designed using pass-transistor logic).

For every circuit, the objective is to determine appropriate sizes for each transistor so that the total resistance of both the pull-up and pull-down networks is 6.5 kΩ under the worst-case conduction path. The given reference for Vdd = 2.5V and 0.25um technology values are:

- Rnmos = 13kΩ
- Rpmos = 31kΩ
- Wref = Lref = 2λ
- λ = 0.125um

1.2 OHdecoder

$$f_{OHdecoder} = (b3b2b1b0)'$$

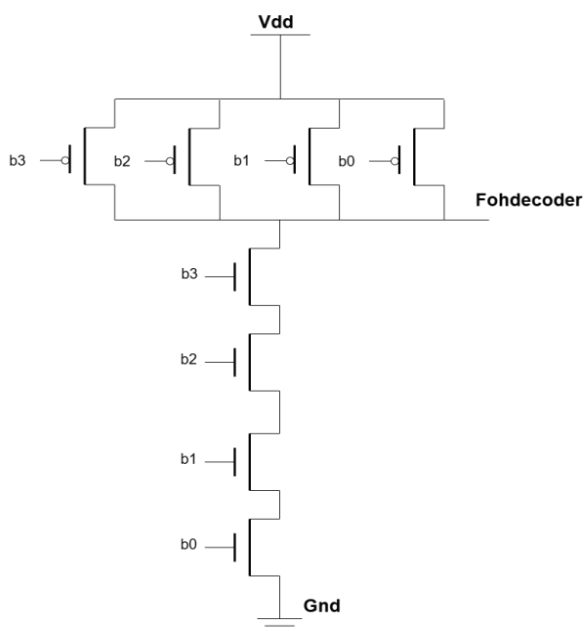

Although the decoder output could also be implemented by using a NOR gate followed by an inverter, this approach was avoided because the additional inverter would require two extra transistors, increasing the total device count. Furthermore, placing PMOS devices in series and adding the inverter would enlarge the required layout area, especially since PMOS transistors require larger widths than NMOS ($W_{P,ref} > W_{N,ref}$).

Pull-Down Network (NMOS):

Single Path (b3-b2-b1-b0): 4 NMOS → $Rb3 + Rb2 + Rb1 + Rb0 \ = \ 6.5\ k\Omega$

$$, so\ Rb3 = Rb2 = Rb1 = Rb0 \ = 1.625\ k\Omega$$

$$Wb3 = \ Wb2 = \ Wb1 = \ Wb0 \ = \ Wref \ \times \left(\frac{Rnmos}{Rb0}\right) = \ 2\lambda \ \times \left(\frac{13.000}{1.625}\right) = \ 16\lambda \ = \ 2\ um$$

Pull-Up Network (PMOS):

In the worst-case pull-up one transistor will conduct. Therefore, each PMOS transistor should be 6.5kΩ to represent the total resistance.

$$Wp \ = \ W_{ref} \times \left(\frac{Rpmos}{6.500}\right) = \ 2\lambda \ \times \left(\frac{31.000}{6.500}\right) = \ 9.54\lambda \ \approx \ 1.2\ um$$

Final Transistor Dimensions

Transistor	Type	W (λ)	W (μm)
b3	NMOS	16	2
b2	NMOS	16	2
b1	NMOS	16	2
b0	NMOS	16	2
b3	PMOS	9.54	1.2
b2	PMOS	9.54	1.2
b1	PMOS	9.54	1.2
b0	PMOS	9.54	1.2

1.3 MUX

$$\boldsymbol{f_{mux} = \ (s'a + sb)}$$

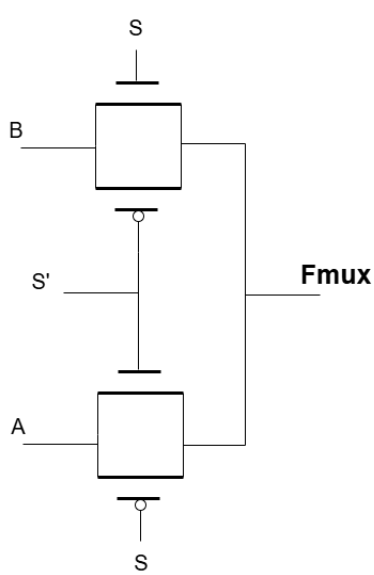

A single-pass-transistor implementation of the MUX was considered, but wasn't used because it suffers from severe signal-degradation issues. An NMOS pass transistor cannot pass a strong logic '1', resulting in a VDD−Vth drop at the output. To correct this, the single-transistor design would require two inverters (meaning 4 additional transistors) to restore full CMOS voltage levels. This increases the total transistor count beyond that of the two-pass-transistor design. The chosen two-transistor MUX avoids these problems, correctly implements the function without extra buffering, and therefore achieves the required behavior using the minimum number of devices.

In the MUX transmission-gate design, the goal is for the conducting path to present an equivalent on-resistance of 6.5 kΩ. Since the NMOS and PMOS transistors conduct in parallel, their individual resistance must each be 13 kΩ so that $R_{eq} = (13\,\text{k}\Omega \parallel 13\,\text{k}\Omega) = 6.5\,\text{k}\Omega$. Using the reference values $R_{N,ref} = 13\,\text{k}\Omega$ at $W_{ref} = 2\lambda$ and $R_{P,ref} = 31\,\text{k}\Omega$ at $W_{ref} = 2\lambda$, this leads to $W_{NMOS} = 2\lambda$ and $W_{PMOS} = 2\lambda \cdot (31/13) = 4.76\lambda$

Final Transistor Dimensions

Transistor	Type	W (λ)	W (μm)
S nmos	NMOS	2λ	0.25
S' nmos	NMOS	2λ	0.25
S pmos	PMOS	4.76λ	0.595
S'pmos	PMOS	4.76λ	0.595

1.4 OAI31

$$\boldsymbol{f_{oai31}} = \big(\boldsymbol{ab} + \boldsymbol{b}(\boldsymbol{c} + \boldsymbol{d})\big)' = (\boldsymbol{b}(\boldsymbol{a} + \boldsymbol{c} + \boldsymbol{d}))'$$

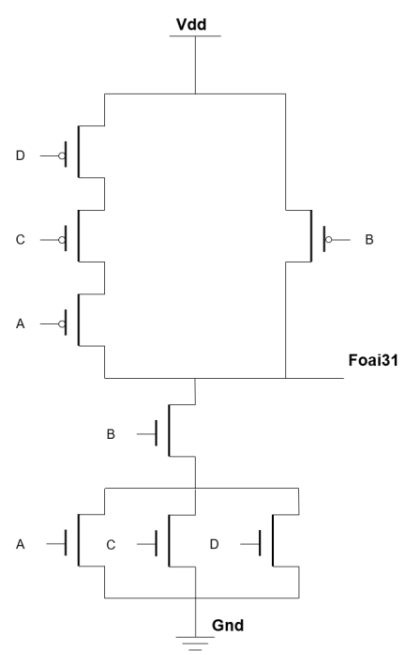

Pull-Down Network (NMOS):

In the worst-case pull-down two transistors will conduct. The B will conduct and then either A, C or D will conduct. So, $Rb + Rx = 6.5k\Omega \rightarrow Rb = Rx = 3.25k\Omega$

$$Wb = Wa = Wc = Wc = Wref \times \left(\frac{Rnmos}{Rb0}\right) = 2\lambda \times \left(\frac{13.000}{3250}\right) = 8\lambda = 1um$$

Pull-Up Network (PMOS):

Path 1 (a): Single PMOS → $Rb = 6.5\ k\Omega$

$$Wb = Wref \times \left(\frac{Rnmos}{Rb}\right) = 2\lambda \times \left(\frac{31.000}{6.500}\right) = 9.54\lambda \approx 1.2\ um$$

Path 2 (a–c-d): Three PMOS in series → $Ra + Rc + Rd = 6.5\ k\Omega$,

$$so\ Ra = Rc = Rd \approx 2.16\ k\Omega$$

$$Wa = Wc = Wd = Wref \times \left(\frac{Rnmos}{Rb}\right) = 2\lambda \times \left(\frac{31.000}{2160}\right) = 28.7\lambda \approx 3.58\ \mu m$$

Final Transistor Dimensions

Transistor	Type	W (λ)	W (μm)
a	NMOS	8	1
b	NMOS	8	1
c	NMOS	8	1
d	NMOS	8	1
a	PMOS	28.7	3.58
b	PMOS	9.54	1.2
c	PMOS	28.7	3.58
d	PMOS	28.7	3.58

1.5 XNOR

I believe that there was possibly a typo in the assignment and that the function shouldn't have an apostrophe at the end, because that would make the function be the XOR gate and not the XNOR. So, for the following part I assumed that the function was "(a'b'+ab)"

$$f_{xnor} = (a'b' + ab) = (a'b + ab')'$$

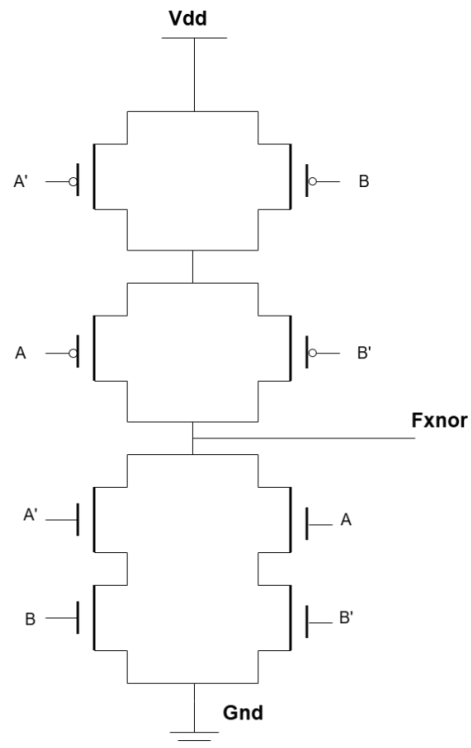

Pull-Down Network (NMOS):

In the worst-case pull-down two transistors will conduct. Either A', B or A, B' will conduct. So, $Ra' + Rb = 6.5k\Omega \rightarrow Ra' = Rb = 3.25k\Omega$ and $Ra = Rb' = 3.25k\Omega$

$$Wa = Wb = Wa' = Wb' = Wref \times \left(\frac{13.000}{3.250}\right) = 8\lambda = 1.00\,\mu m$$

Pull-Up Network (PMOS):

In the worst-case pull-down two transistors will conduct. So $Ra = Rb = Ra' = Rb' = 3.25k\Omega$

$$Wa = Wb = Wa' = Wb' = Wref \times \left(\frac{31.000}{3.250}\right) = 19.08\lambda \approx 2.38\,\mu m$$

Final Transistor Dimensions

Transistor	Type	W (λ)	W (μm)
a	NMOS	8	1
b	NMOS	8	1
a'	NMOS	8	1
b'	NMOS	8	1
a	PMOS	19.08	2.38
b	PMOS	19.08	2.38
a'	PMOS	19.08	2.38
b'	PMOS	19.08	2.38

1.6 AOI21

$$f_{aoi21} = (a + (bc))'$$

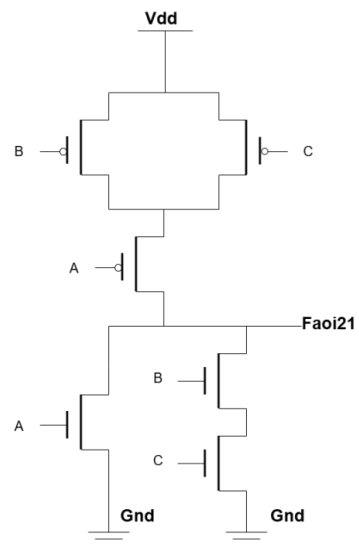

In the PUN, transistor A is positioned closer to the output node, and the (b||c) parallel pair is placed closer to VDD. This ordering does not affect the total resistance, but it makes the circuit faster because only one transistor is connected to the output. Therefore, technically only one parasitic capacitance of the PUN is really affecting the output.

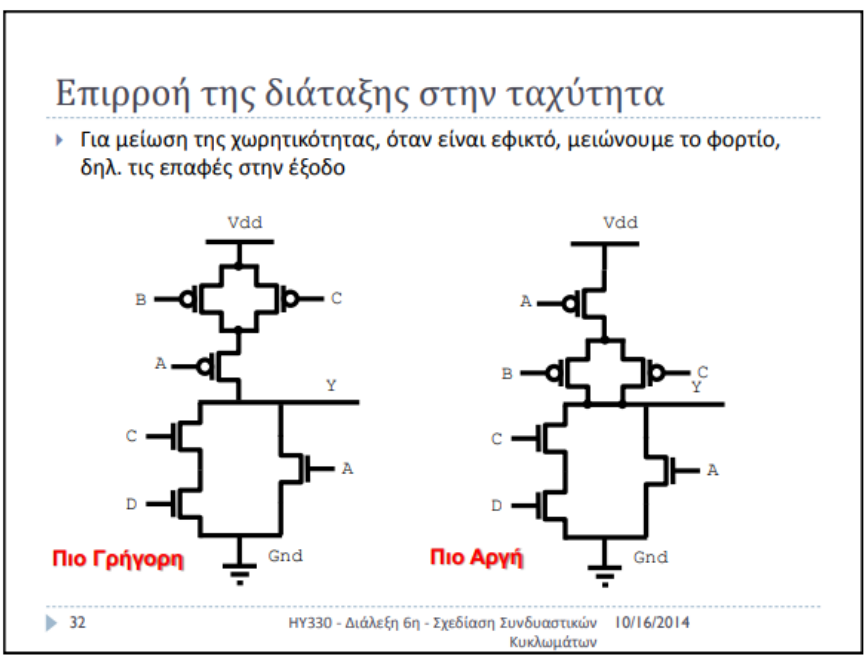

Pull-Down Network (NMOS):

Path 1 (a): Single NMOS → $Ra = 6.5\ k\Omega$

$$Wa = Wref \times \left(\frac{Rnmos}{Ra}\right) = 2\lambda \times \left(\frac{13.000}{6.500}\right) = 4\lambda = 0.50\ \mu m$$

Path 2 (b–c): Two NMOS in series → $Rb + Rc = 6.5\ k\Omega, so\ Rb = Rc = 3.25\ k\Omega$

$$Wb = Wc = Wref \times \left(\frac{13.000}{3.250}\right) = 8\lambda = 1.00\ \mu m$$

Pull-Up Network (PMOS):

The worst-case pull-up occurs when only one of b or c conducts, resulting in two PMOS in series Pa and one of Pb or Pc. Each PMOS transistor should therefore present half of the total 6.5 kΩ resistance:

$$Wa = Wb = Wc = W_{ref} \times \left(\frac{Rpmos}{3{,}250}\right) = 2\lambda \times \left(\frac{31.000}{3.250}\right) = 19.08\lambda \approx 2.38\ \mu m$$

Final Transistor Dimensions

Transistor	Type	W(λ)	W(um)
a	NMOS	4	0.5
b	NMOS	8	1
c	NMOS	8	1
a	PMOS	19.08	2.38
b	PMOS	19.08	2.38
c	PMOS	19.08	2.38

2. Part B –Stick Diagram Designs

2.1 Introduction

In this section, stick diagrams were made using drawio for each gate designed in Part (a). These diagrams will help visualize the layout before proceeding to full layout in Part (c).

1.2 OHdecoder stick diagram

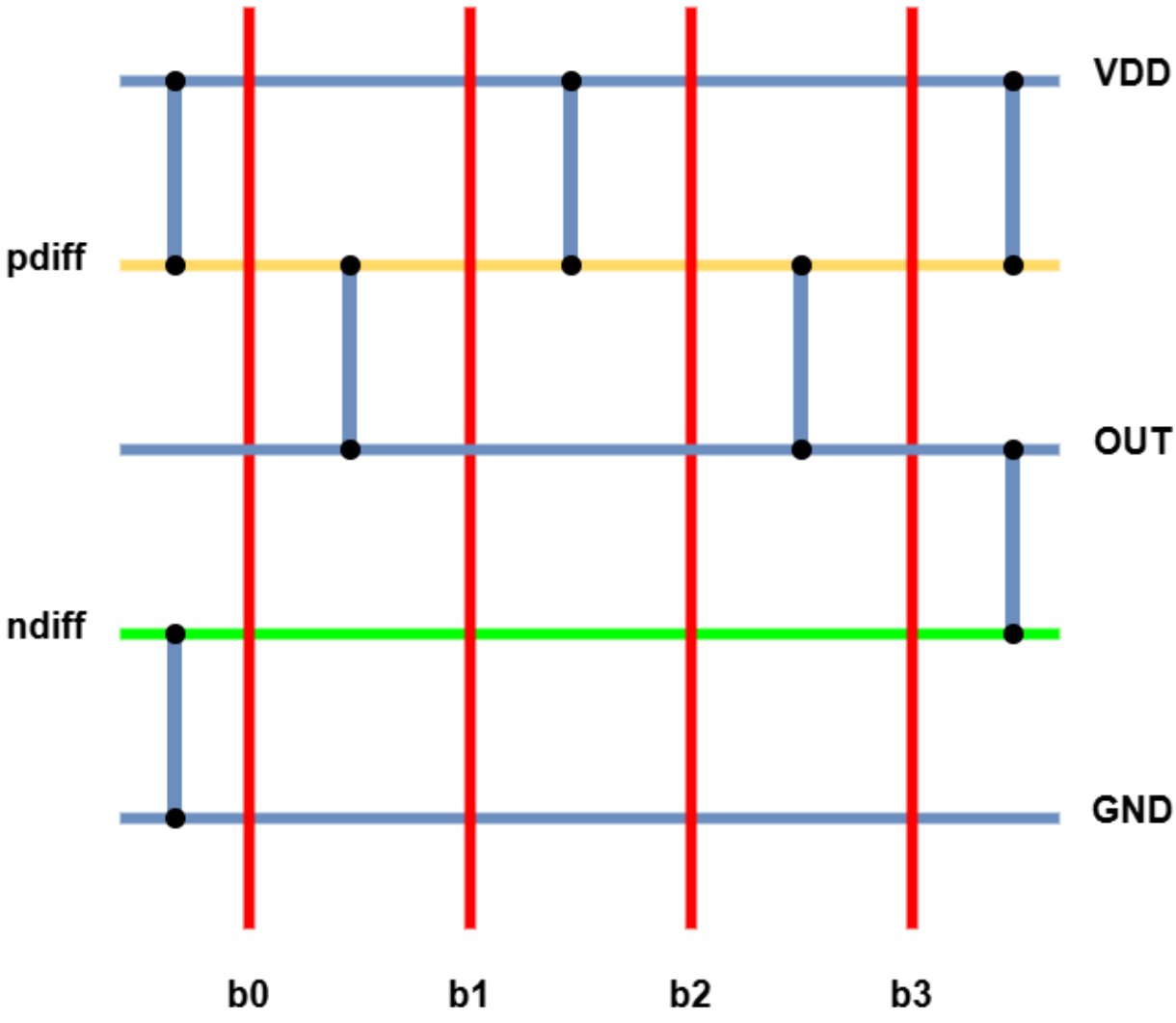

1.3 MUX stick diagram

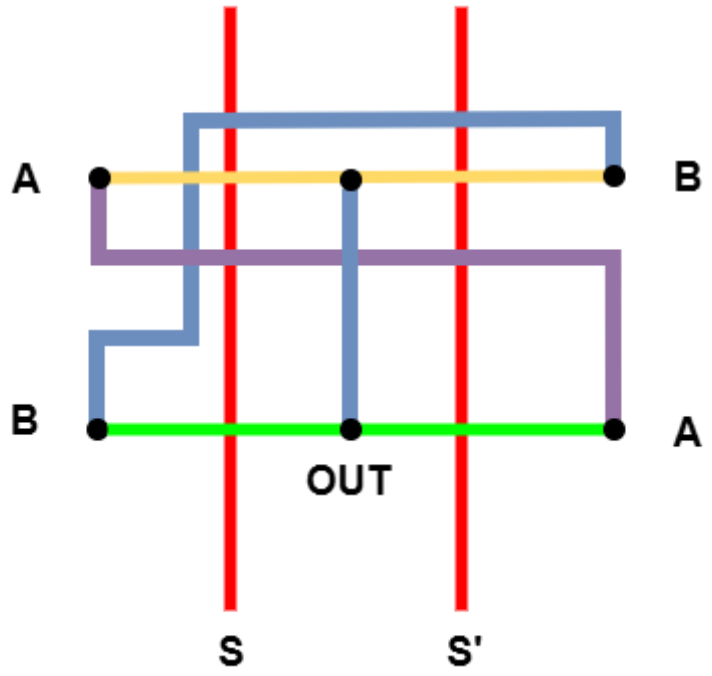

1.4 OAI31 stick diagram

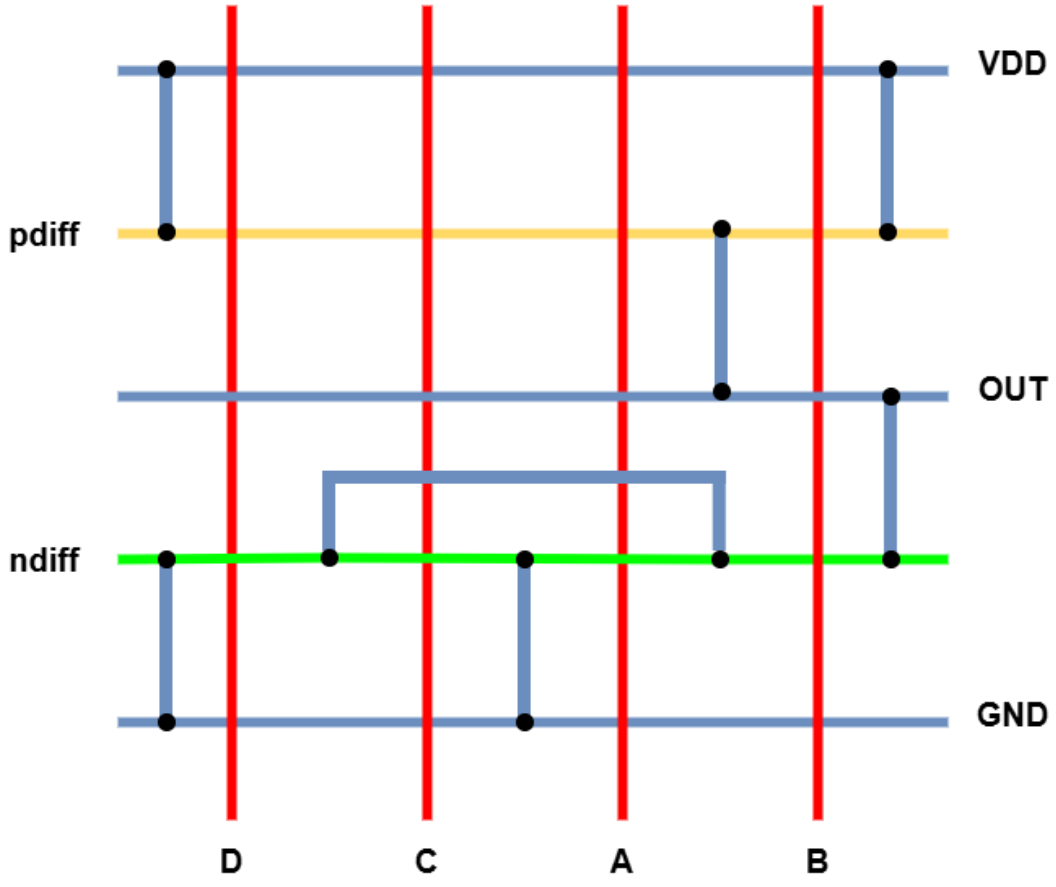

1.5 XNOR stick diagram

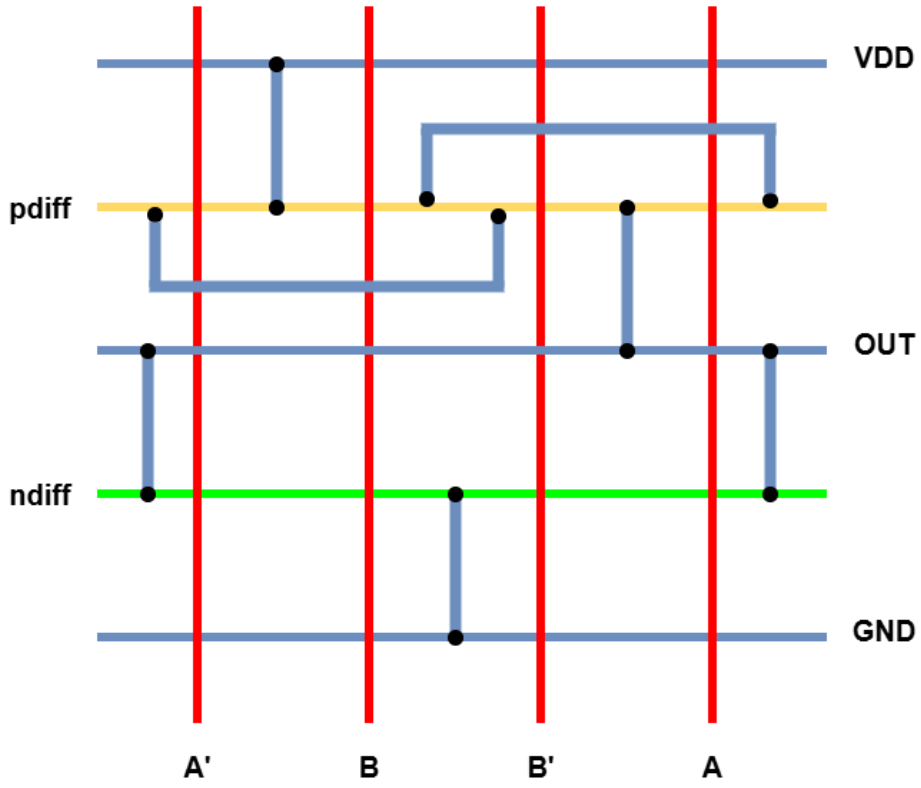

1.6 AOI21 stick diagram

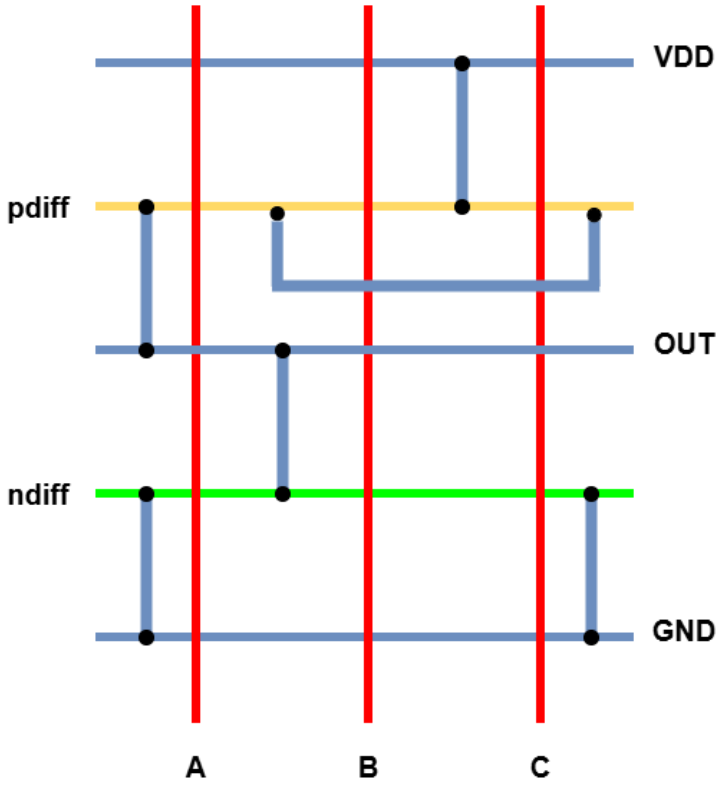

3. Part C – Top View Designs using MAGIC

3.1 Introduction

In this part, the transistor-level layouts of all gates are implemented using MAGIC. The SCMOS technology file used by MAGIC internally defines the design grid in units of λ, with λ = 1 um. After generating the SPICE netlist, the default line ".option scale = 1u" is replaced with ".option scale = 0.125u" so that all transistor widths, lengths, and extracted areas are correctly interpreted.

Moreover, whenever a computed transistor width results in a non-integer λ value (e.g., 9.54λ), the dimension is rounded to the nearest practical integer λ value for the layout.

Each section will include a Truth table and a waveform from NGSPICE that simulates the corresponding Truth table. The waveforms will show that the "out" node behaves the same way as it was described in the Truth tables, resulting to validating the operation of each cell.

Note that for the waveforms to be visible I shifted the values of the inputs by 4, 8, 12 … volts

3.2 OHdecoder MAGIC

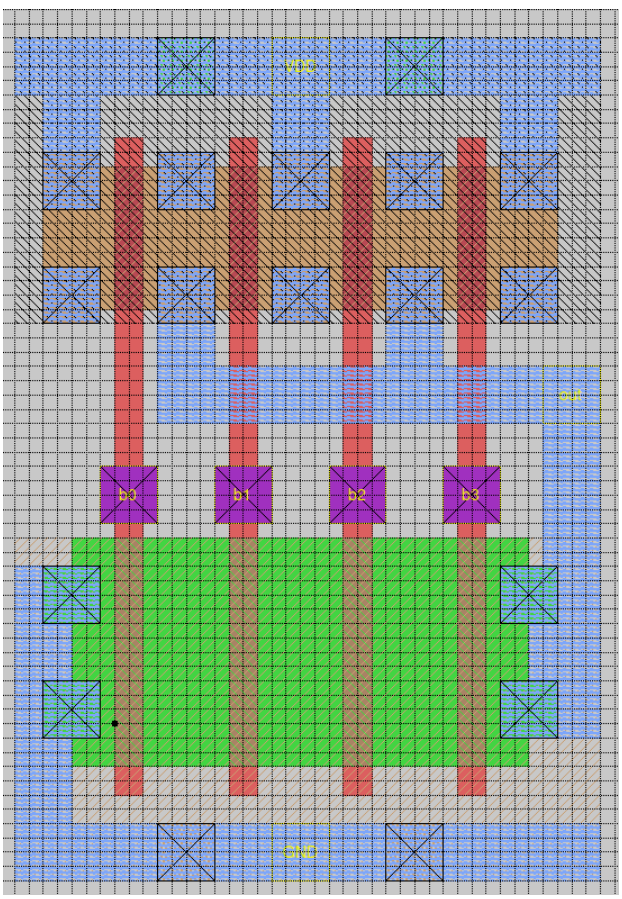

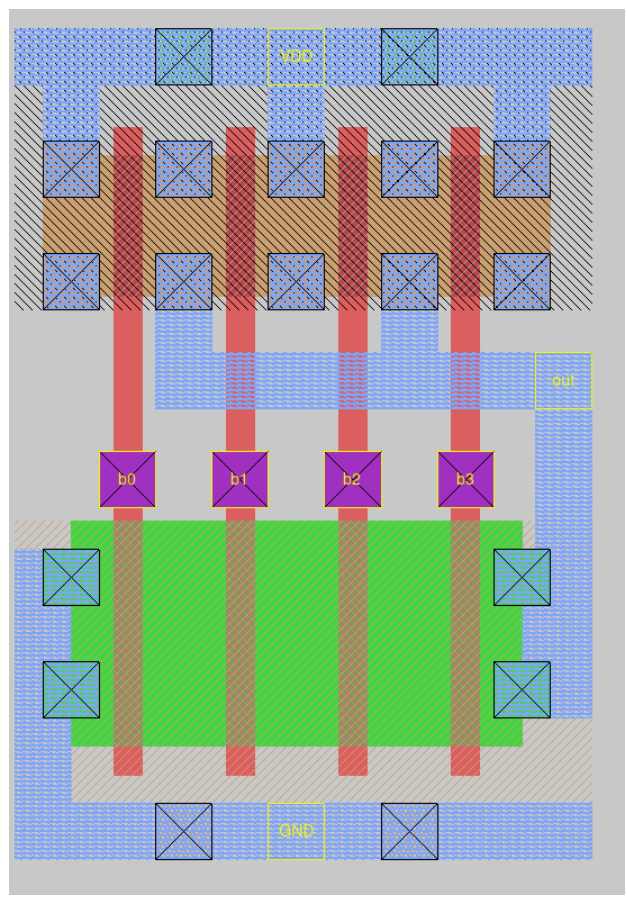

Truth table

b3	b2	b1	b0	**OUT = (b3b2b1b0)'**
0	0	0	0	1
0	0	0	1	1
0	0	1	0	1
0	0	1	1	1
0	1	0	0	1
0	1	0	1	1
0	1	1	0	1
0	1	1	1	1
1	0	0	0	1
1	0	0	1	1
1	0	1	0	1
1	0	1	1	1
1	1	0	0	1
1	1	0	1	1
1	1	1	0	1
1	1	1	1	0

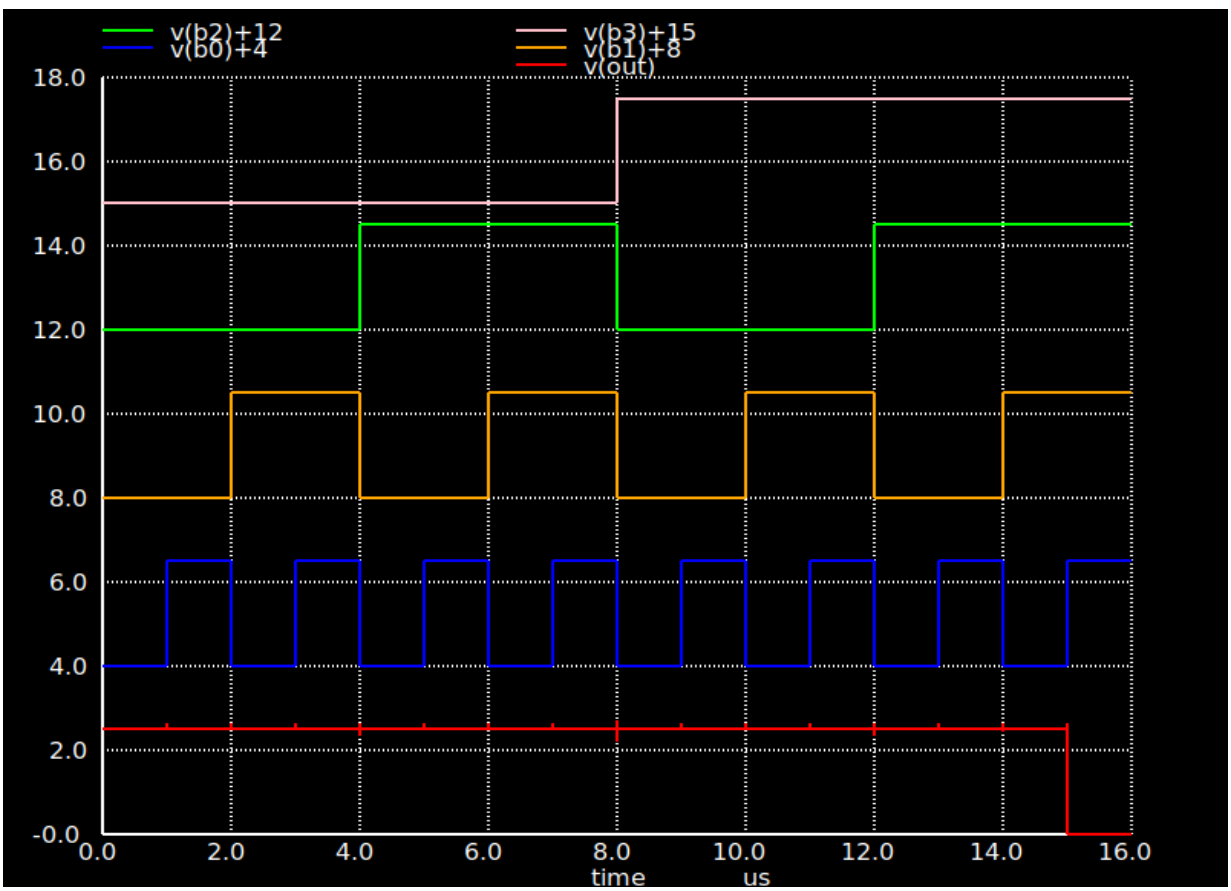

The values of the output align with the truth table, so the cell design is correct.

3.3 MUX MAGIC

The Wp has to be rounded to from 4.76λ to 5λ. Also, in magic every diffusion width has to be at least 3λ, so Wn = 2λ cannot be used. For this reason while designing the cell in MAGIC the widths will be double the size that was decided in Part A, meaning Wn= 4λ and Wp = 10λ. Then after extracting the design to spice, the λ will be changed to λ = 0,0625 um.

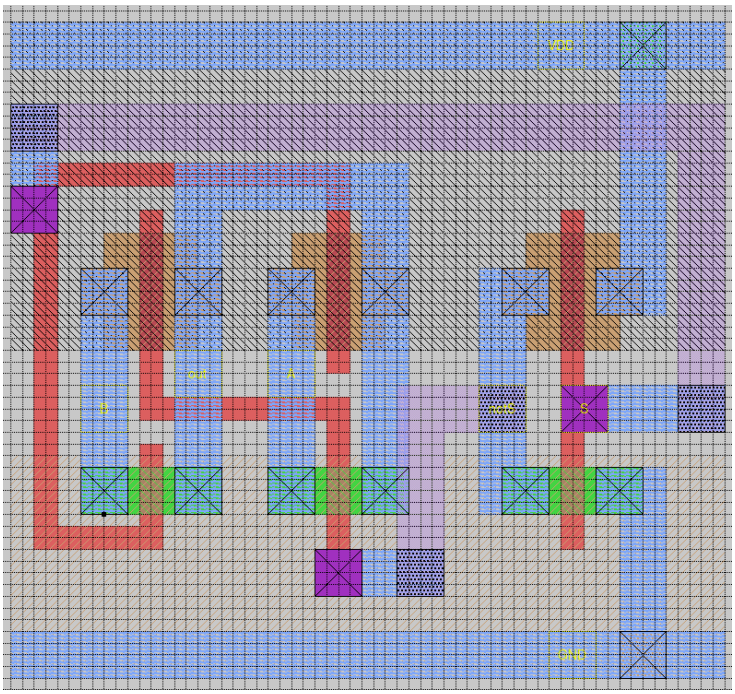

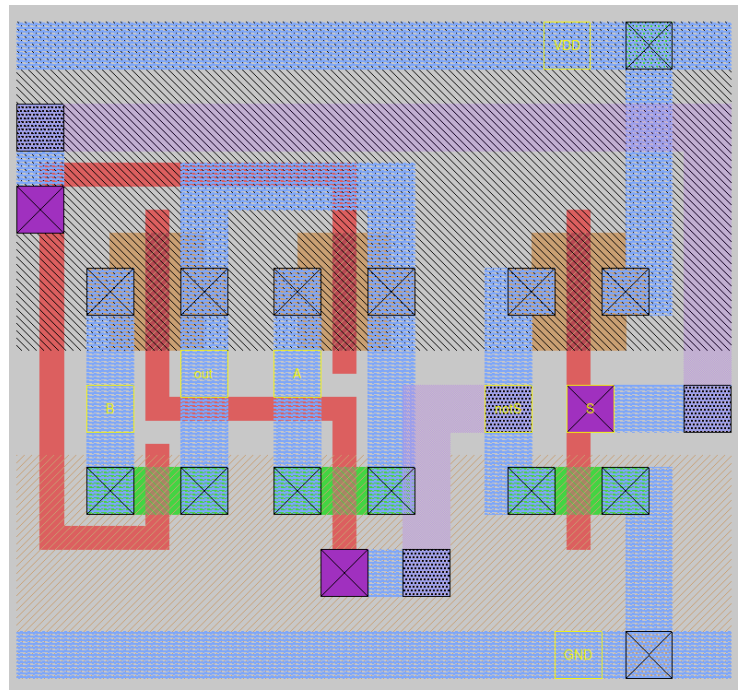

Truth table

Inputs	S	**OUT = (S'A+SB)**
A, B	0	A
A, B	1	B

The left waveform has A = 1.5V, B = 0.5V and the right waveform has A = 0.5V, B = 1.5V.

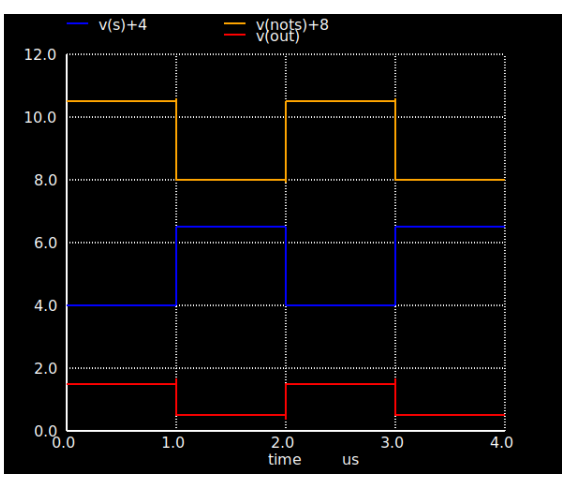

Figure 2/ A=1.5V and B=0.5V

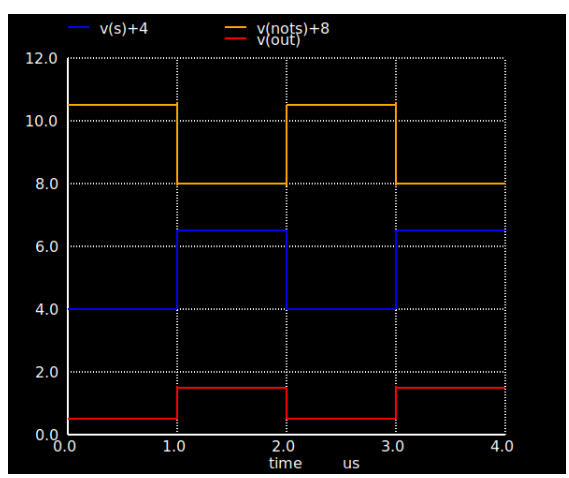

Figure 1/A=0.5V and B=1.5V

3.4 OAI31 MAGIC

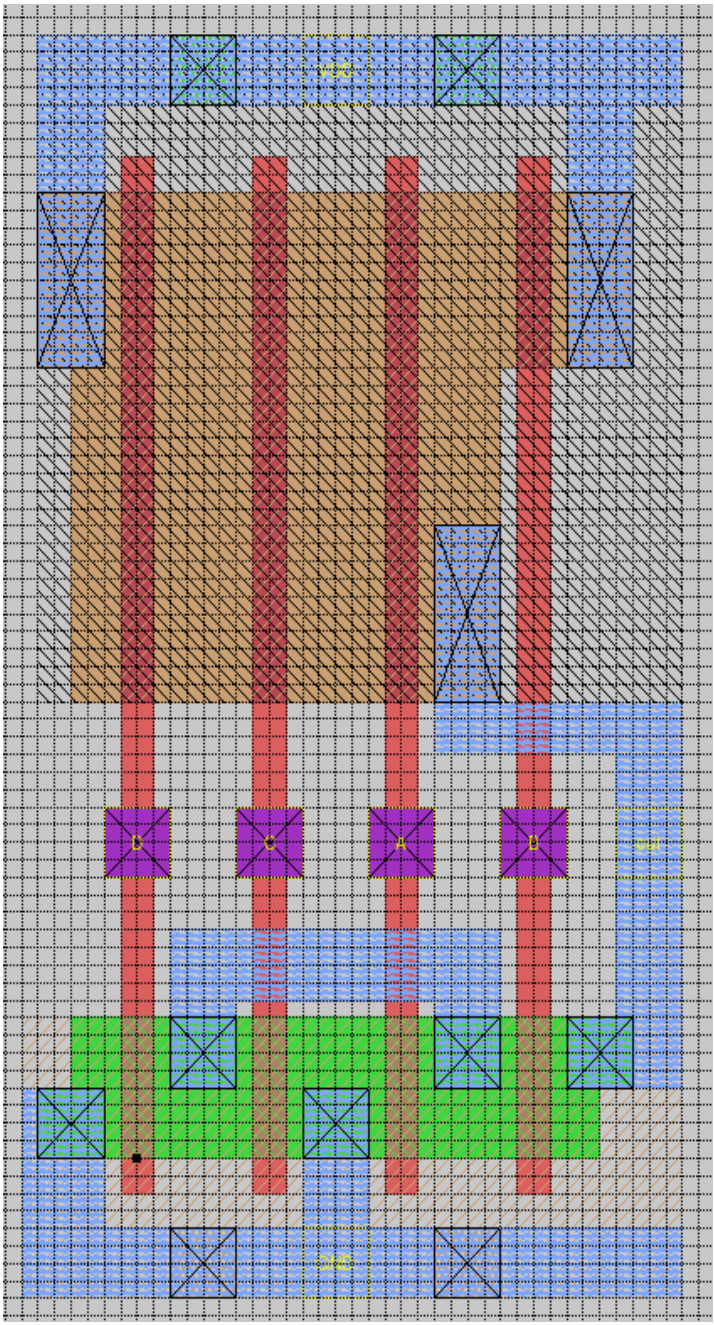

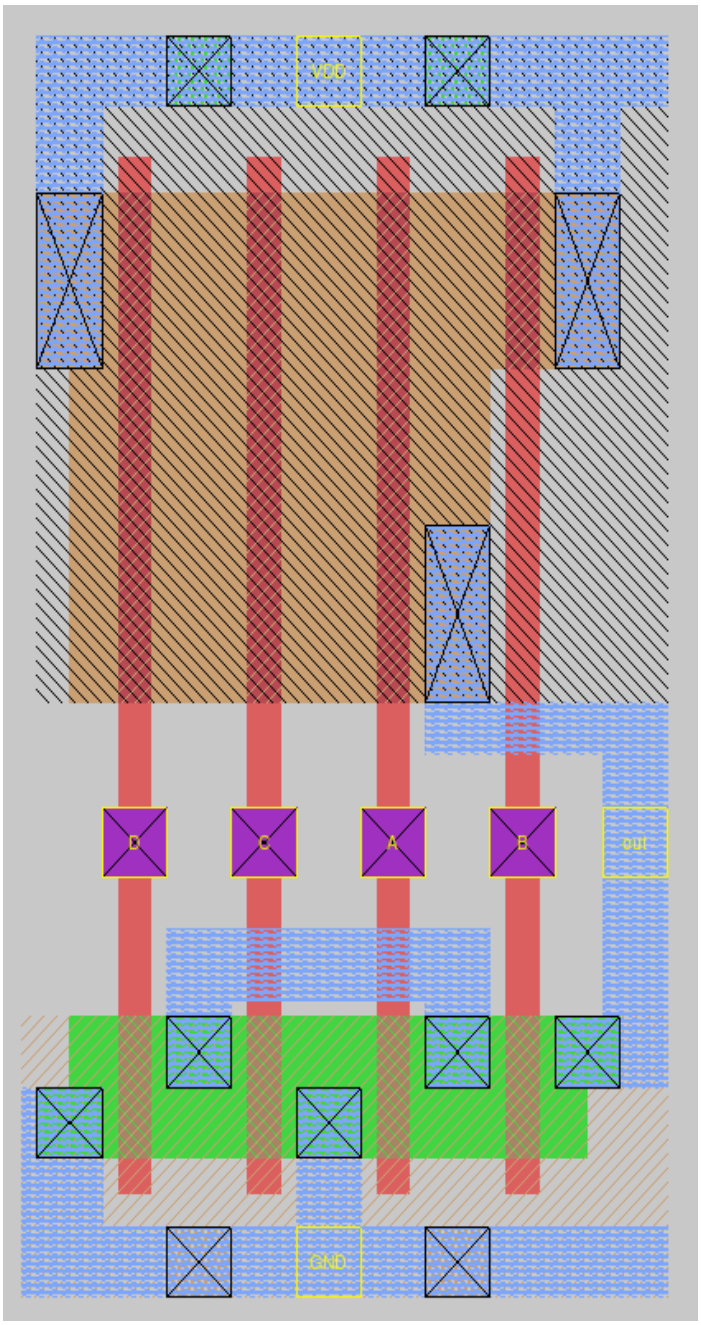

Truth table

A	B	C	D	**OUT** = (AB+ B(C+D))’ = **(B(A+C+D))’**
0	0	0	0	1
0	0	0	1	1
0	0	1	0	1
0	0	1	1	1
0	1	0	0	1
0	1	0	1	0
0	1	1	0	0
0	1	1	1	0
1	0	0	0	1
1	0	0	1	1
1	0	1	0	1
1	0	1	1	1
1	1	0	0	0
1	1	0	1	0
1	1	1	0	0
1	1	1	1	0

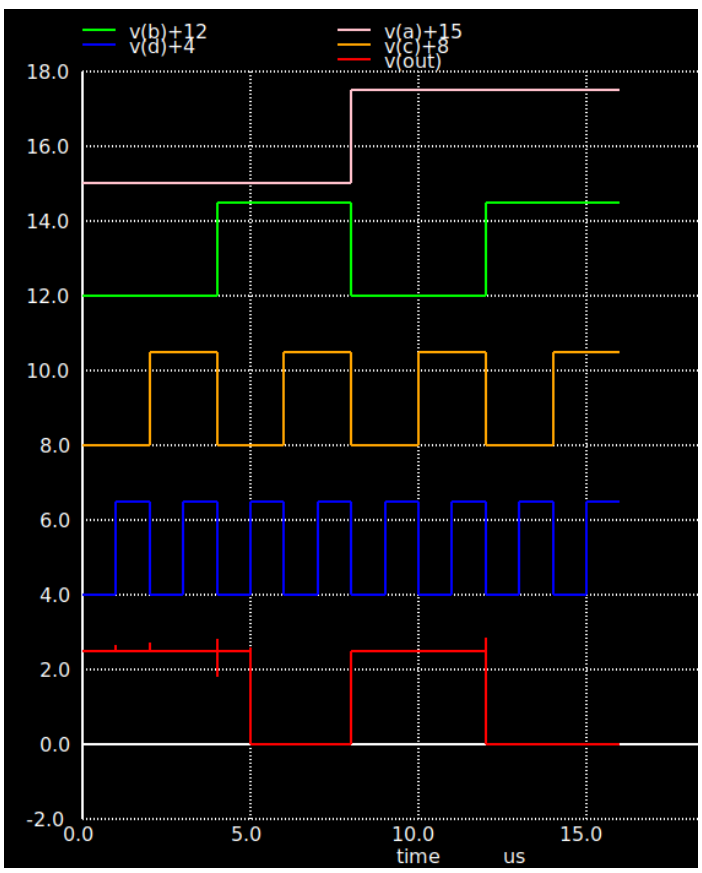

The values of the output align with the truth table, so the cell design is correct.

3.5 XNOR MAGIC

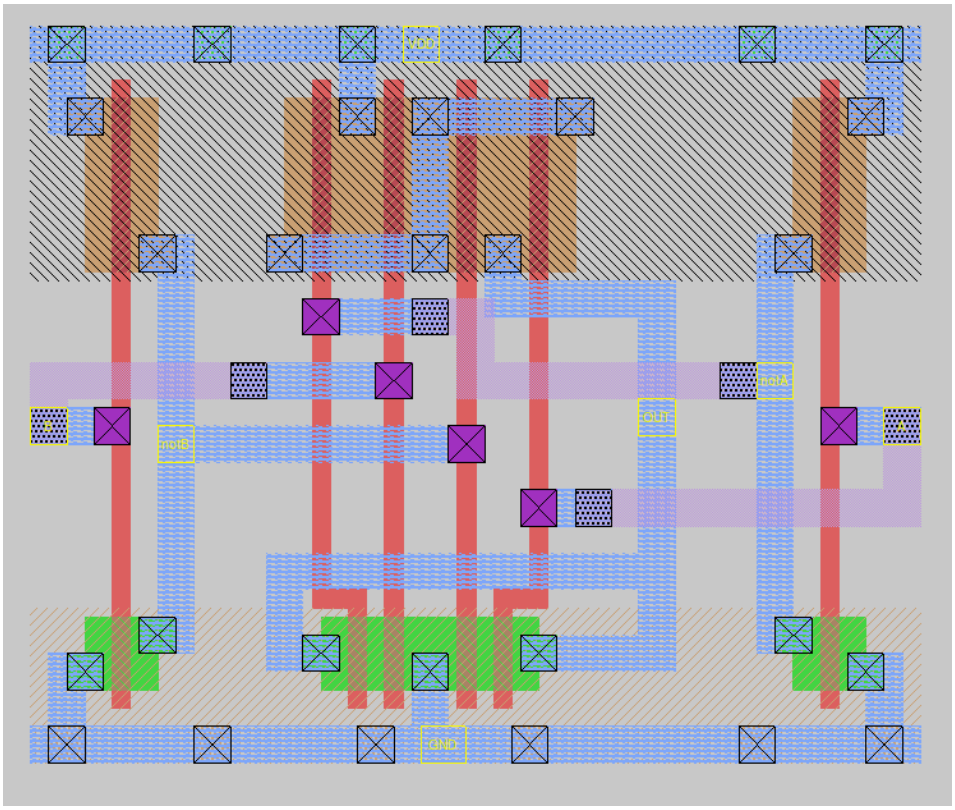

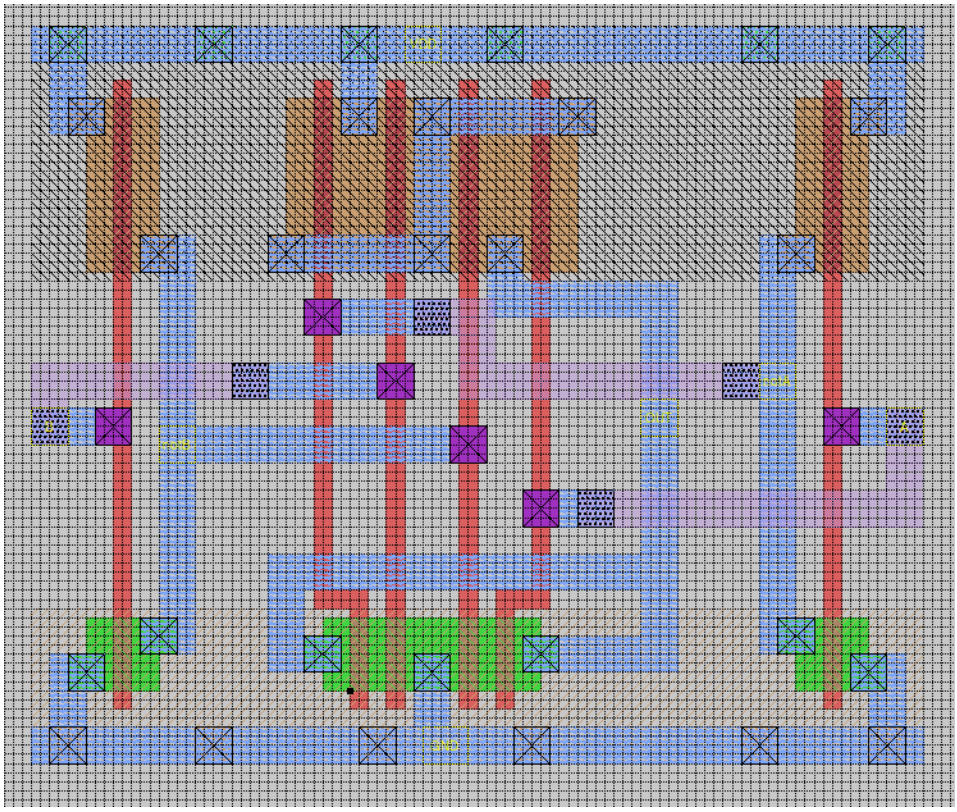

Truth table

A	B	**OUT = (A'B'+ AB)**
0	0	1
0	1	0
1	0	0
1	1	1

The following 2 waveforms prove that the notA and notB are always the opposite of A and B, as intented.

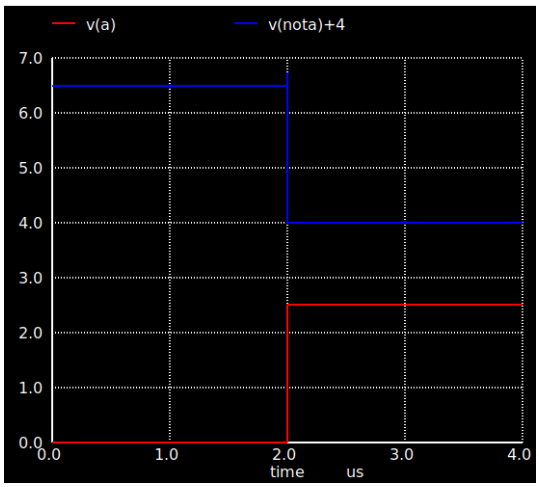

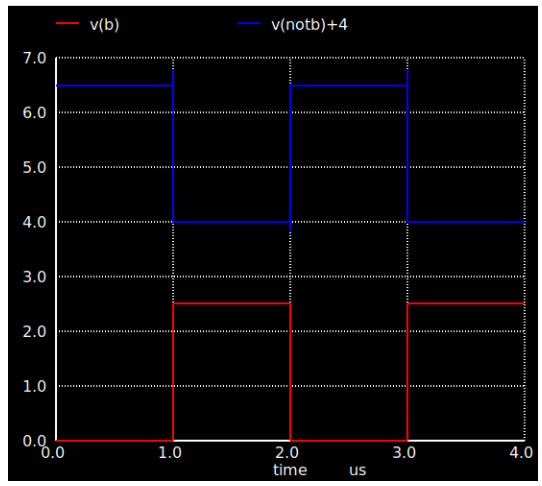

And now the full waveform shows that the values of the output align with the truth table, so the cell design is correct.

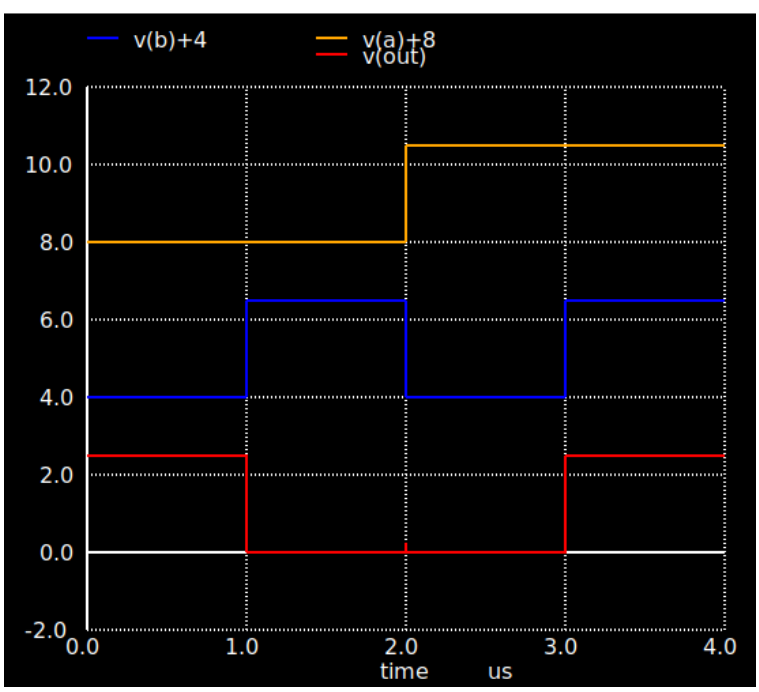

3.6 AOI21 MAGIC

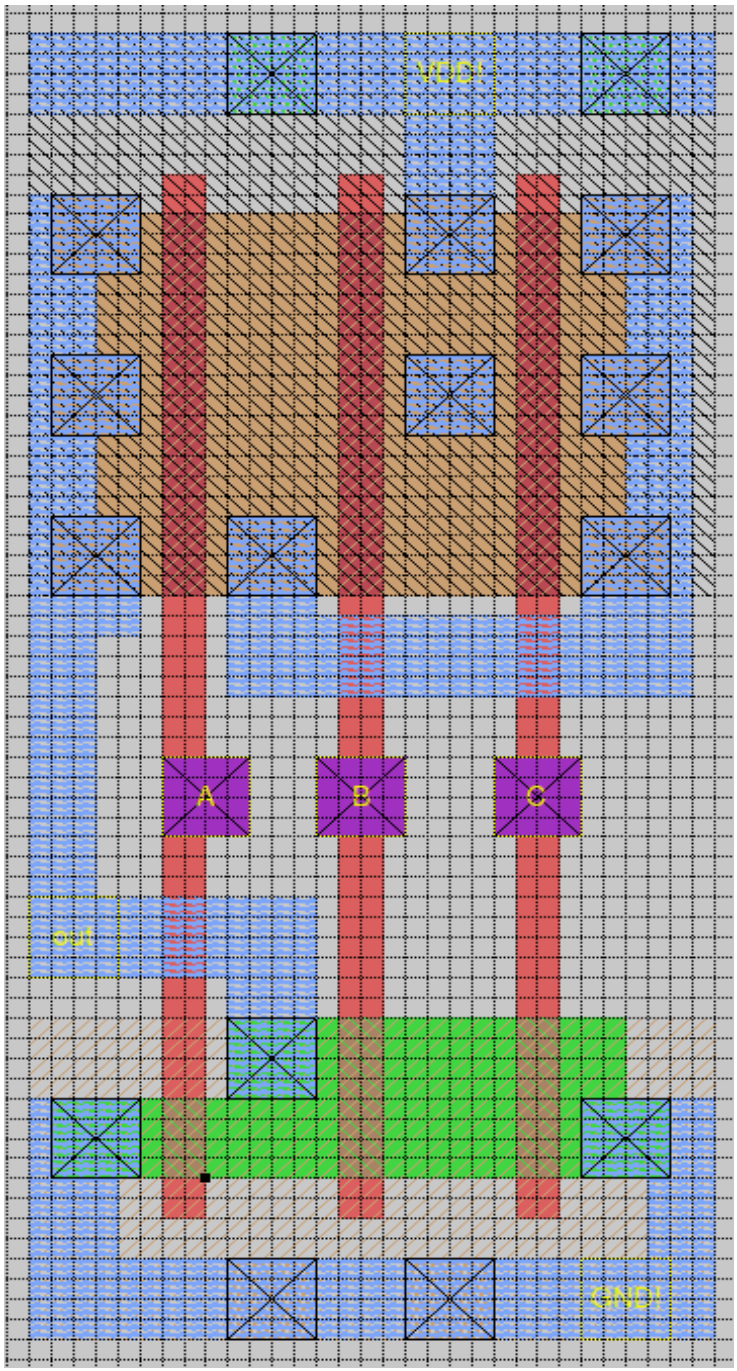

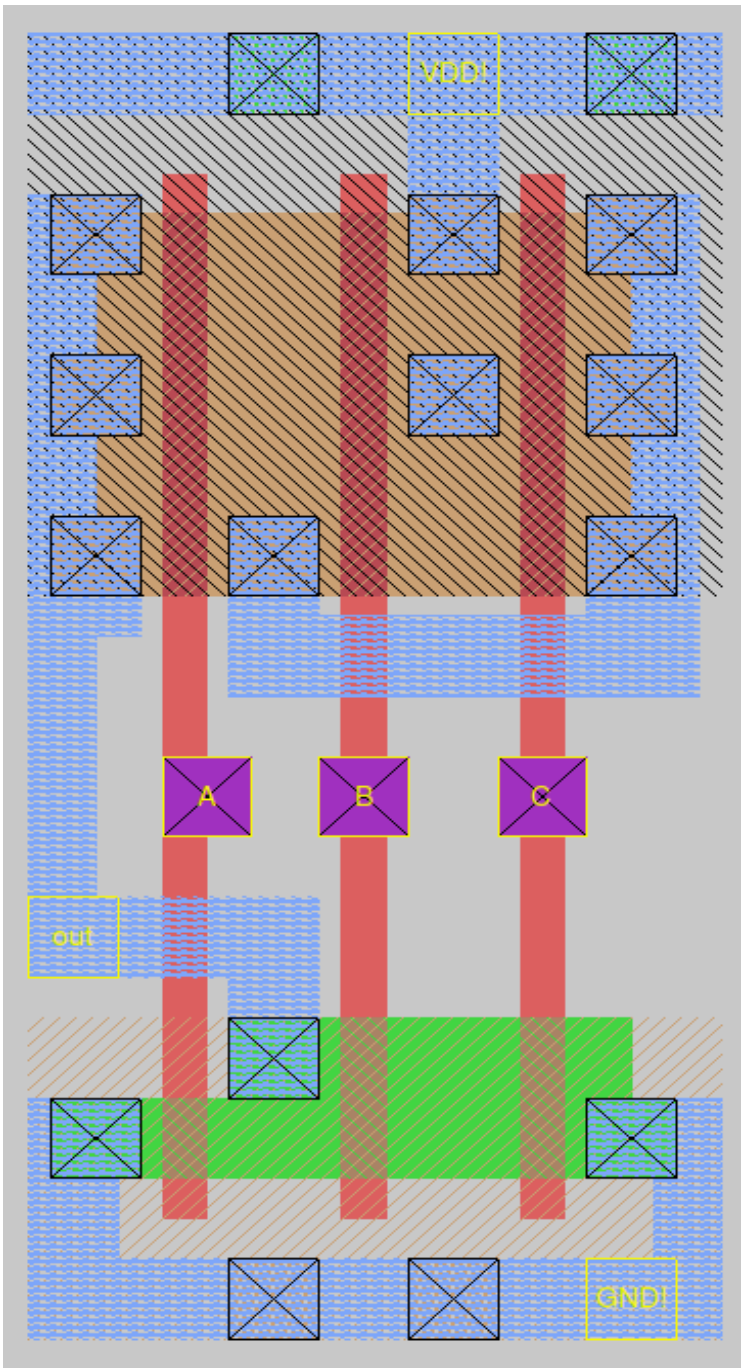

Truth table

A	B	C	**OUT = (A+BC)'**
0	0	0	1
0	0	1	1
0	1	0	1
0	1	1	0
1	0	0	0
1	0	1	0
1	1	0	0
1	1	1	0

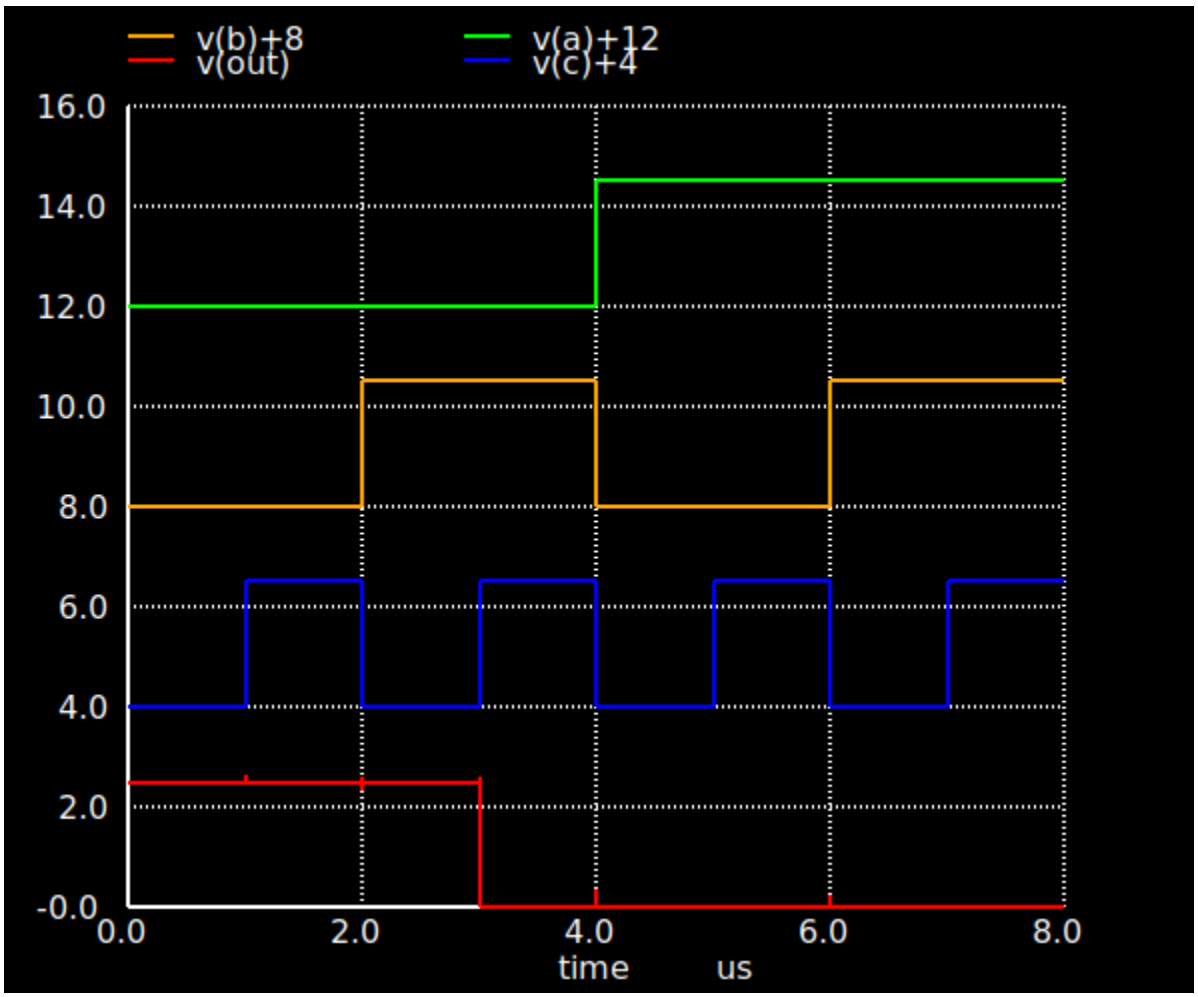

The values of the output align with the truth table, so the cell design is correct.

4. Part D – Diffusion Capacitance Analysis (AOI21)

4.1 Area and Perimeter Measurements

This section computes the diffusion capacitances of the AOI21 cell. Below is a table with all the calculated areas and perimeters.

Transistor	W(um)	AS(um^2)	AD(um^2)	PS(um^2)	PD(um^2)
NMOS A	0.5 **(4λ)**	0.3125 **(20λ^2)**	0.3125 **(20λ^2)**	1.75 **(14λ)**	1.25 **(10λ)**
NMOS B	1 **(8λ)**	0.375 **(24λ^2)**	0.375 **(24λ^2)**	0.75 **(6λ)**	0.75 **(6λ)**
NMOS C	1 **(8λ)**	0.375 **(24λ^2)**	0.5 **(32λ^2)**	0.75 **(6λ)**	2.25 **(18λ)**
PMOS A	2.375 **(19λ)**	1.296875 **(83λ^2)**	0.890625 **(57λ^2)**	4.875 **(39λ)**	0.75 **(6λ)**
PMOS B	2.375 **(19λ)**	0.890625 **(57λ^2)**	0.921875 **(59λ^2)**	0.75 **(6λ)**	0.875 **(7λ)**
PMOS C	2.375 **(19λ)**	0.921875 **(59λ^2)**	1.296875 **(83λ^2)**	0.875 **(7λ)**	4.875 **(39λ)**

To calculate the diffusion capacitance, only the nodes connected to the "out" must be considered to the calculation. The diffusion capacitance is derived from this equation:

$$C_{diff} = C_j \cdot K_j \cdot A + C_{jsw} \cdot K_{jsw} \cdot P$$

where A is the diffusion area (um^2) and P the diffusion perimeter (um).

The nodes connected to the "out" are:

- NMOS A (Drain): AD = 0.3125 um^2, PD = 1.75 um^2
- NMOS B (Source): AS = 0.375 um^2, PS = 0.75 um^2
- PMOS A (Source): AS = 1.296875 um^2, PS = 4.875 um^2

4.2 Diffusion Capacitance Calculations

Capacitance of NMOS A:

- Area term:

$$C_j * K_{nj} * A_{nmosA} = 2(\frac{fF}{um^2}) * 0.57 * 0.3125um^2 = 0.35625 \text{ fF}.$$

- Sidewall term:

$$C_{jsw} * K_{njsw} * P_{nmosA} = 0.28(\frac{fF}{um^2}) * 0.61 * 1.25um^2 = 0.2135 \text{ fF}.$$

$$\boldsymbol{C_{nmosA}} = 0.35625 + 0.2135 = 0.56975 \text{ fF} \approx \mathbf{0.57\ fF}.$$

Capacitance of NMOS B:

- Area term:

$$C_j * K_{nj} * A_{nmosB} = 2(\frac{fF}{um^2}) * 0.57 * 0.375um^2 = 0.4275 \text{ fF}.$$

- Sidewall term:

$$C_{jsw} * K_{njsw} * P_{nmosB} = 0.28(\frac{fF}{um^2}) * 0.61 * 0.75um^2 = 0.114375 \text{ fF}.$$

$$\boldsymbol{C_{nmosB}} = 0.4275 + 0.114375 = 0.541875 \text{ fF} \approx \mathbf{0.542 \text{ fF}}.$$

Capacitance of NMOS B:

- Area term:

$$C_j * K_{nj} * A_{pmosA} = 2\left(\frac{fF}{um^2}\right) * 0.79 * 1.296875um^2 = 2.0490625 \text{ fF}.$$

- Sidewall term:

$$C_{jsw} * K_{njsw} * P_{pmosA} = 0.28(\frac{fF}{um^2}) * 0.86 * 4.875um^2 = 1.1739 \text{ fF}.$$

$$\boldsymbol{C_{pmosA}} = 2.0490625 + 1.1739 = 3.2229625 \text{ fF} \approx \mathbf{3.223 \text{ fF}}.$$

Finally, the total diffusion capacitance seen at the output (1→0) is:

$$\boldsymbol{C_{outdiff}} = C_{nmosA} + C_{nmosB} + C_{pmosA} = \mathbf{4.335 \text{ fF}}.$$

Part E – Delay Analysis for AOI21

The worst-case pull-down path is the series path $b \rightarrow c$ ($R_b = R_c = 3.25$ kΩ).

Using the diffusion capacitances previously computed in Part D. The intrinsic diffusion capacitance was $C_{out,diff} = 4.335$ fF.

The gate drives four identical copies of itself which means that the external load is equal to $4 \times C_{out,diff}$. Thus, the total capacitance sitting at the output node is the intrinsic diffusion capacitance plus the external load:

$$\boldsymbol{C_{out,total}} = C_{out,diff} + 4\,C_{out,diff} = 5\,C_{out,diff} = \mathbf{21.675fF}.$$

The node between b and c also contributes to the diffusion capacitance:

- NMOS C (Source): AS = 0.375 um^2, PS = 0.75 um^2
- NMOS B (Drain): AD = 0.375 um^2, PS = 0.75 um^2

Both happen to have the same Area and Perimeter measurements. Therefore we can measure the capacitance of NMOS B and C together.

Capacitance of NMOS B and C:

- Area term:

$$C_j * K_{nj} * A = 2(\frac{fF}{um^2}) * 0.57 * 0.375um^2 = 0.4275 \text{ fF}.$$

- Sidewall term:

$$C_{jsw} * K_{njsw} * P = 0.28(\frac{fF}{um^2}) * 0.61 * 0.21875\, um^2 = 0.1281 \text{ fF}.$$

$$\boldsymbol{C_{nmosB,C}} = 0.4275 + 0.1281 = \mathbf{0.5556\ fF}$$

Thus,

$$\boxed{\boldsymbol{C_{node}} = 2 * C_{nmosB,C} = \mathbf{1.1112\ fF}}$$

The Elmore delay in this scenario is:

$$\tau_{\text{Elmore}} = (R_a + R_b + R_c)\, C_{out,total} + R_c\, C_{node}.$$

This follows from the Elmore formula: each capacitance is multiplied by the resistance along the path from that capacitance to ground.

Given

- $R_a = 6.5k\Omega$
- $R_b = R_c = 3.25$ kΩ
- $C_{out,total} = 15.11$ fF
- $C_{node} = 0.2fF$

Results to

$$\boxed{\boldsymbol{\tau}_{\mathbf{Elmore}} = 281.775 \text{ ps} + 3.6114 \text{ ps} = \mathbf{285.3864\ ps.}}$$